

New Dimensions in Technical Documentation

Written by Tata Consultancy Services and Right Hemisphere

RIGHT HEMISPHERE®

TATA CONSULTANCY SERVICES

Right Hemisphere®
New Dimensions in Technical Documentation

Executive Summary

There is nothing "usual" about "busy as usual" today. Product complexity continues to escalate exponentially. Customers want not only the right product, but a product that can be cost effectively deployed and serviced, with total cost of ownership (TCO) trending downward. A product is not considered complete without the supporting documentation and tools required to transfer knowledge to the users and the support organizations. Serviceability has become not only a requirement, but a strategic differentiator in the marketplace. This has placed a heavier burden on the developers of technical documentation, who now must:

- ***Deliver a new caliber of documentation:*** Satisfy these user requirements and strengthen the competitive position of the combined product-documentation bundle with new levels of effectiveness for knowledge transfer. Keep up with and adhere to emerging standards for technical documentation, including recent commercial and military mandates for 3D content.

- ***Reduce development costs:*** Decrease content development times and lower development and distribution costs for technical documentation, at first introduction and during the entire product lifecycle. This requires a more efficient approach for the time-consuming, and therefore costly, efforts surrounding the development of visuals included in technical documentation. Engineering time must be kept to a minimum during the transfer of knowledge to the subject matter experts that support the creation of technical documentation.

- ***Improve knowledge transfer to the end user and support teams:*** Studies show that visualizations dramatically improve knowledge transfer. Global markets, with costly translation processes, are also driving the replacement of text with visuals. Without a more efficient process for developing visualizations, costs will skyrocket.

- ***Shorten time to market:*** Begin developing content earlier in the development cycle, and shorten the overall content development process. Streamline the process of locating and accessing engineering data, avoiding the legwork traditionally required to get at 3D engineering drawings and other required system data.

Next-generation graphics authoring processes and other emerging technologies allow today's technical publication groups to meet all of these goals. The foundational process shift centers on effectively leveraging existing CAD assets for automating the creation of high-impact 2D and 3D illustrations and animations. The emergence of 3D visualization techniques can be seamlessly introduced as part of a new workflow, referred to as Product Graphics Management (PGM). The PGM workflow and related technologies give manufacturers an opportunity for product and service differentiation in the marketplace. Affordable advances in 3D publishing, desktop viewing, and web-delivered interactive learning are also driving increased customer demands for next-generation documentation and delivery options.

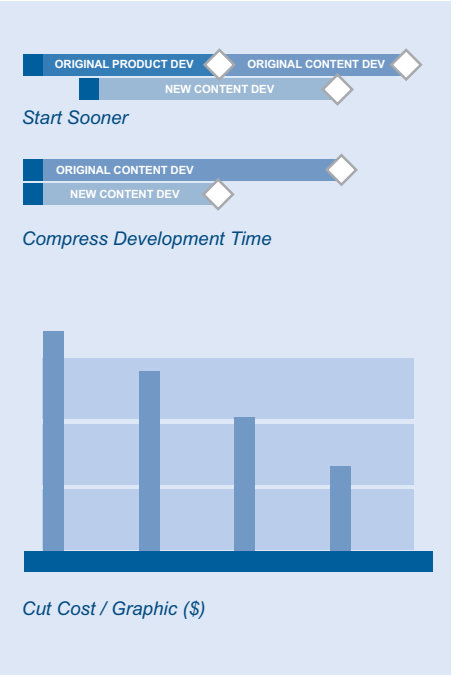

Serviceability of products has become a strategic differentiator in the marketplace. Technical documentation owners must find ways to reduce development costs and shorten time of overall content development.

All registered company names, brand names, product names, logos or trademarks are the property of their respective holders.
Copyright © Right Hemisphere 2006, All Rights Reserved.

This paper describes:

- The technical documentation challenges faced by today's manufacturers.
- Technologies that can add new dimensions to both 2D and 3D technical documentation, enhancing the knowledge transfer process and giving manufacturers opportunities for product differentiation.
- Suggestions for a new PGM-based workflow for the development and publication of technical documentation. These solutions can take advantage of digital video, interactive product configurators, and other formats suitable for personal platforms such as i-Pods and cell phones.

An appendix provides examples of PGM applications, drawn from actual customer deployments.

Background: Historical 2D Illustration Development

Content developers employed a similar process whenever creating illustrations for operation manuals, maintenance manuals, manufacturing instructions, service bulletins, interactive electronic technical manuals (IETMs), requests for quotes (RFQs), engineering change orders (ECOs), or other technical documents. The traditional illustration development involved three stages:

- Gathering source data
- Creating illustrations (and embedding with text)
- Delivering or publishing the document

After initial completion, a repeat of the same three stages would be required to respond to engineering changes, errors in the original document, or changes to procedures. Since all stages of the illustration development were labor intensive, revisions could result in cycle times as long as, or in excess of, the original development cycle.

The limitations of this traditional development approach affected all three stages:

- ***Gathering data:*** The creation of illustrations requires illustrators to spend the time required to locate and study 3D CAD data files, 2D engineering documentation, blueprints, photographs, actual parts/products, and any other available procedural information. Making use of 3D CAD data requires accessing and searching files created and managed with Product Lifecycle Management or PLM systems that are designed for and used by engineers, and these are skills that illustrators typically lack. Engineering resources are required to assist the illustrators for this step of the process.
- ***Editing photographs:*** Photographs, while very useful for documentation, require waiting for physical prototypes, and incur the high costs of photo shoots. In some cases, software tools are used to "vector trace" photographs and create line illustrations. This process is time consuming, and does not allow the illustrator to change the projection angles or viewing distances. Without vector tracing, photographs themselves are often difficult to view in a document, since irrelevant parts cannot be hidden. Standardized views cannot be shown unless the photographs were taken with the desired views in mind.

"3D publishing and repurposing CAD models. *Used to develop manufacturing instructions, technical publications, installation manuals, maintenance procedures, and marketing collateral, this is the fastest growing form of lifecycle collaboration. Companies are implementing 3D publishing to reduce time to market (61%), lower product development costs (58%), and create higher quality product documentation (47%). Actions taken to achieve these goals include reusing design data in downstream publishing (62%), aligning creative and engineering teams (54%), and reducing the time to generate technical documentation (43%). Best in class companies are 50% more likely than other companies to be using 3D publishing to reduce time to market and communicate manufacturing instructions to the plant and to use graphics to overcome language barriers."*

Source: Aberdeen Group - The Product Lifecycle Collaboration Benchmark Report, 2006

All registered company names, brand names, product names, logos or trademarks are the property of their respective holders.
Copyright © Right Hemisphere 2006, All Rights Reserved.

- ***Videos:*** As with photographs, the creation of a standard video requires the availability of product prototypes, and a suitable environment for filming. Videos are expensive and do not allow for the display of internal product details or relating product dimensions. Other visualizations are still required to complete knowledge transfer.

- ***Editing/creating line art:*** While highly effective for communicating information about complex components and systems, line art illustrations are time consuming and therefore expensive to create manually, even with the current wealth of graphics art software tools. Ordered procedures and difficult maneuvers are difficult to convey, and require the creation of multiple illustrations. Adding in shading, see-through "glass" views, or highly rendered art remain cost prohibitive for most technical documentation processes if they must be generated from scratch.

- ***Publishing:*** Printing, especially when using color illustrations, incurs high costs and requires an ongoing budget for distributing subsequent updates. Translation requirements introduce more cost and delays. Minimizing text, with the replacement of copy with visuals, reduces the translation process and cost, but shifts the burden to the illustrator. Shipping costs and delays make it impossible to respond to changes in real time. Electronic distribution alternatives provide real-time distribution and significant cost savings and also overcome the static display limits of 2D printed documents, but require the ability to open and view the digital content. File compatibilities and viewer software licensing can create logistical and economical obstacles.

A PGM Foundation for Illustrations

This may sound like like a scene (see side bar) from a science fiction movie, or a depiction of the future. After all, most organizations still have to wait for prototypes and photographs before they can begin creating visualizations for technical documentation. But this scenario is possible today, and many organizations have already taken the first steps to introduce powerful 3D content and the efficiencies of a PGM workflow.

Improving traditional 2D technical documentation development can be accomplished while simultaneously moving towards next-generation 3D illustration options. The starting point for these advancements is the ability to leverage existing CAD assets. An automated, streamlined publishing pipeline-efficiently processing CAD data into a variety of traditional and electronic publishing channels-can slash costs compared to manually creating 2D illustrations, and accelerate the delivery of today's traditional documentation and emerging innovative learning solutions. CAD data enables a broad range of 3D illustration possibilities, including animations and photorealistic renderings that can be produced without expending significantly more resources or time, especially when taking into account the time and cost-savings that result from reduced textual content.

Extracting CAD Data from PLM Systems

A product graphics data server solution can establish a repository of CAD data derivatives that can be efficiently shared and leveraged by teams of content developers. CAD data files can be translated into light-weight data files that can be efficiently transferred over today's networks, and edited using a variety of real-time rendering and content editing tools on low-cost PC platforms.

Picture the scene:
The first prototype units for a new highly innovative product are just being completed on the manufacturing line. They are sent back to engineering for evaluation and to the quality assurance group for testing. At the same time, they are sent to the support organization that will use them to verify the ***already completed*** *customer training modules and service procedures. How can the supporting documentation be completed before a single prototype is available? All of the 3D engineering drawings, parts lists, and associated product specifications are centralized on the company's CAD data server. As soon as a design file is logged into the server, the technical publication group has access to all of the 3D engineering drawings, bill of materials, and related PMI. Work on the documentation can begin much earlier in the process.*

All registered company names, brand names, product names, logos or trademarks are the property of their respective holders.
Copyright © Right Hemisphere 2006, All Rights Reserved.

As 3D engineering data changes, the files can be resent to the repository, and any content that has been developed from the file can be automatically updated. The controlled storage, access, and update processes must include the security required to protect intellectual property, so that content can be safely made available for access by outsourced partners who may be called on to build out the document-based services content.

Leveraging Light-weight 3D Data: Automated Content Development

With the central CAD derivatives data repository in place, content developers avoid the previously time consuming and resource intensive tasks of retrieving 3D engineering drawings and product description files. To streamline the development process, artists can take advantage of today's 3D authoring applications. Automated functions exist for creating simple line art or annotated views, and users have the option of choosing from a host of tools including 3D Studio Max® and Maya® from Autodesk®, XSI® from Softimage®, Framemaker® and Illustrator® from Adobe®, and many more.

Increasingly, technical documentation best practices are replacing manual authoring with automated processes. For example, PGM software includes the ability to create XML scripts (with a Process Designer tool) and automatically apply the following processes to thousands of different parts or assemblies simultaneously for the concurrent creation of a variety of illustration derivatives:

- Unify normals
- Polygon optimization
- Remove internal surfaces/objects
- Exploded view animations
- Generate views default camera perspective (top, front, left, and 30-degree isometric)
- Exploded 30-degree ISO rendering (shaded and line illustrations)
- Exploded 30-degree ISO line illustration rendering with callouts and bill of materials (BOM)
- All line illustrations in AI Vector Polylines and 2048x2048 PNG files
- All shaded illustrations in 2048x2048-quality JPG

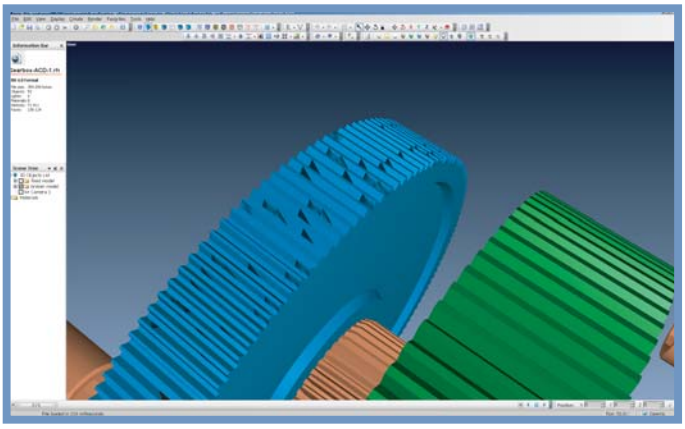

Before: Unify Normals

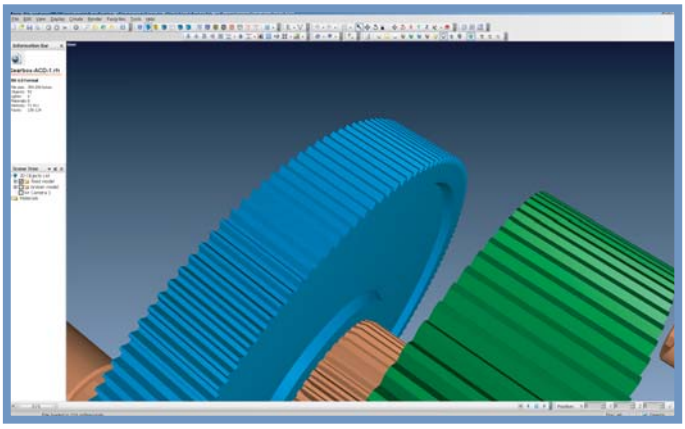

After: Unify Normals

All registered company names, brand names, product names, logos or trademarks are the property of their respective holders.
Copyright © Right Hemisphere 2006, All Rights Reserved.

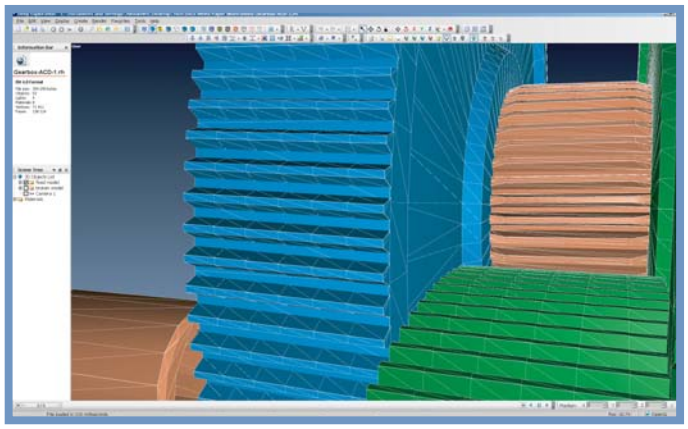

Polygon reduction from 100% to 35% without visible loss of shape.
Before: 11.000 vertices, 21.000 faces.

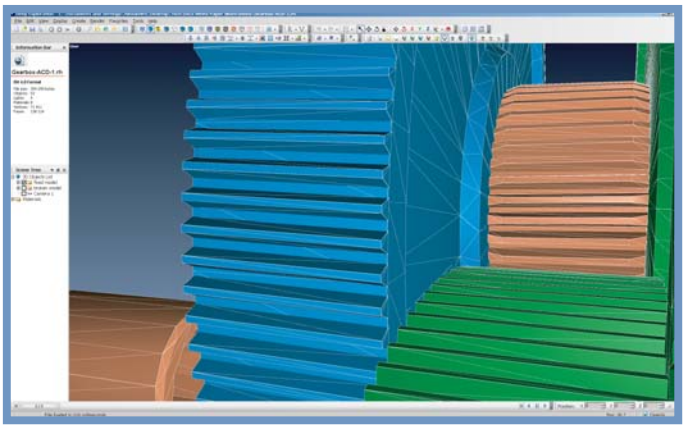

Polygon reduction from 100% to 35% without visible loss of shape.
After: 4.210 vertices, 7.300 faces.

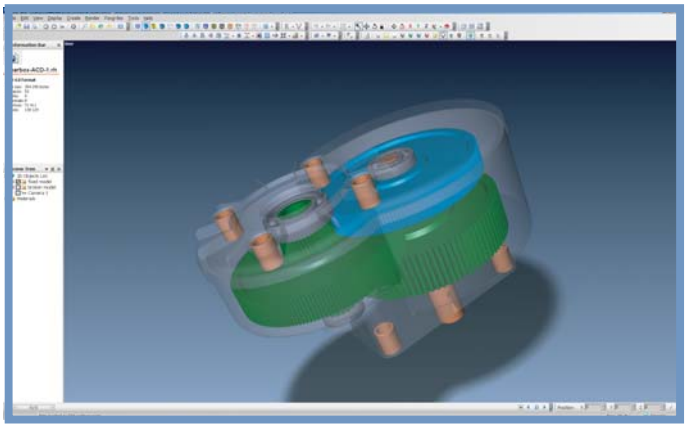

Remove internal surfaces/objects. Before.

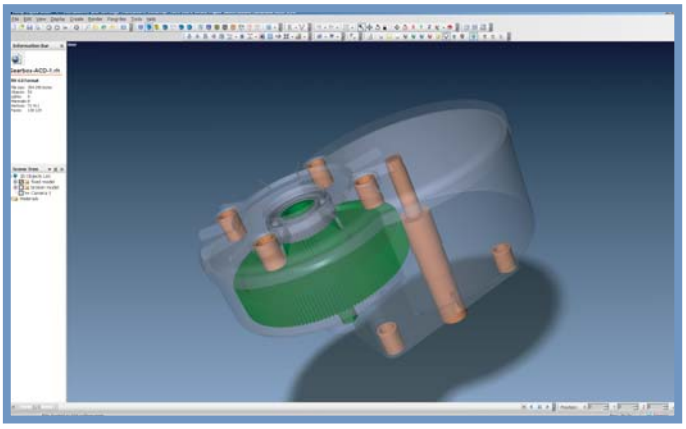

Remove internal surfaces/objects. After.

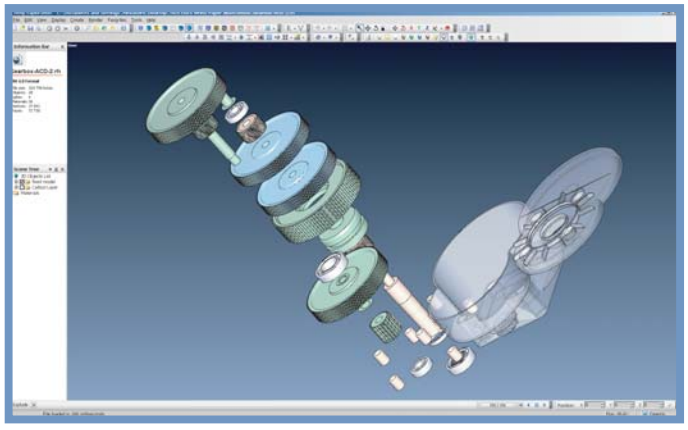

Generate exploded views with animation.

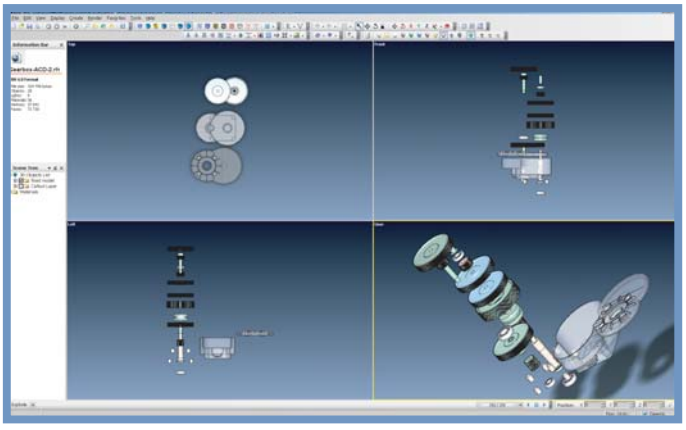

Generate multiple views using default camera perspectives from the top, front, left, and 30 degree isometric (more available).

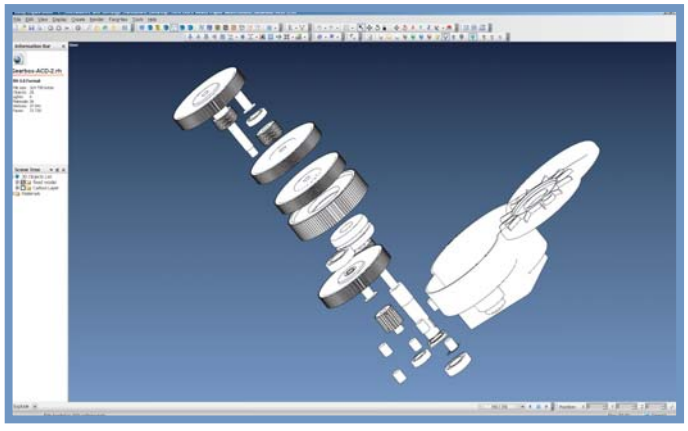

Exploded 30-degree isometric rendering of shaded and line illustrations.

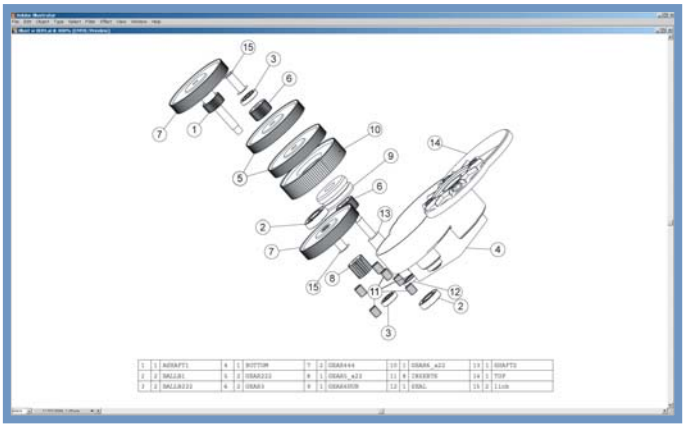

Exploded 30-degree isometric line illustration with callouts and Bill of Materials (BOM).

All registered company names, brand names, product names, logos or trademarks are the property of their respective holders.
Copyright © Right Hemisphere 2006, All Rights Reserved.

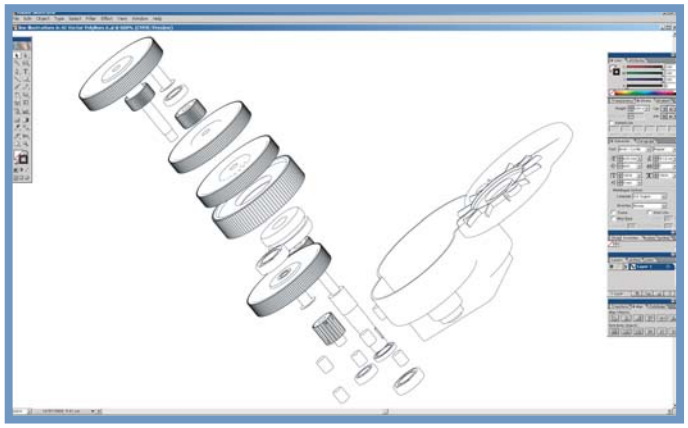

Line illustrations can be exported directly into .ai vector polylines and 2048 x 2048 .png files.

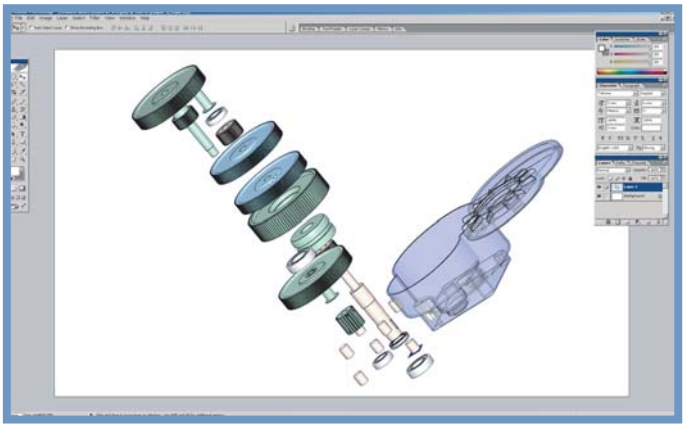

Shaded illustrations can be created into 2048 X 2048 quality .jpg files.

Sharing and Leveraging a Library of Illustrations

Historically, a tech illustrator or graphics person had to seek out and collect any available 3D engineering data relating to the subject matter. The proliferation of affordable CAD systems resulted in a wealth of 3D engineering CAD files, but shifted the illustrator's challenge to that of finding the assistance required to get at and understand the source files. Then the CAD files had to be reworked to create the desired visuals, and the rework has remained a manually intensive, ad-hoc process. Drawing tools speed the process, but each illustration is traditionally still created one line at a time. Once created, drawings are not easily managed and shared among groups and across organizations. Word of mouth-or seeing something in print-are the only modes of discovering for most content developers.

Today, with a CAD derivative data repository directly tailored to the technical content development teams, the documentation development cycle is accelerated. Organizations gain the ability to more quickly locate, access, and leverage not only CAD data, but any additional derivative artwork created from the data. Today's PGM solutions provide the data server functions, and also streamline many other tasks that save time for the content developer:

- CAD data files are made available in a centrally located repository.
- As basic drawings are created, they are added to the associated CAD files (complete assembly drawings, exploded views, stage of build sequence drawings). Today, different groups can easily duplicate efforts without being able to locate already existing drawings.
- Many CAD data viewing options are printable and exportable into learning modules (black and white line art, cut-aways, glass see-through drawings).
- Before PGM solutions, content developers started by creating the required line art for the product. Then, other views would be rendered from the line art. Now, developers can start with highly rendered CAD models and extract the simplified views and drawings required-a more time efficient process. A line-art drawing requires a mouse click instead of a day's work.

The PGM approach changes the distribution of work among teams as well. In the past, one group would have been responsible for assembly drawings. Another would focus on service drawings, and another would be responsible for producing advertising art. With PGM, one person can develop the high-end renderings for the product that can be shared by all the various functional areas. Other groups will still do extraction work and tailor content to their needs, but the extraction can be facilitated with many automated solutions.

All registered company names, brand names, product names, logos or trademarks are the property of their respective holders.
Copyright © Right Hemisphere 2006, All Rights Reserved.

A PGM workflow eliminates redundant work efforts and saves costs throughout the organization, and allows content developers to start earlier in the process, drive more 3D art into the documentation, and enhance the overall value of the product and combined service offering.

Compliance with Illustration Standards

The introduction of a PGM foundation simplifies compliance with a variety of emerging standards and mandates surrounding the creation and management of illustrations. These include:

- The S1000D international specification for the procurement and production of technical publications: Jointly produced by the Aerospace and Defense Industries Association of Europe (ASD) and the Aerospace Industries Association of America (AIA). S1000D is used by government and commercial entities in the aerospace industry.
- The Shareable Content Object Reference Model (SCORM) for online learning: A SCORM-S1000D Testbed project will explore the integration of online learning and technical documentation.
- J1930 Standard (relating to Electrical/Electronic Systems Diagnostic Terms, Definitions, Abbreviations, and Acronyms): This SAE-recommended practice governs terminology in documentation for certain vehicles.
- ASME Y14.41 specification: the American Society of Mechanical Engineers (ASME) uses this standard for 3D drawings relating to medical solutions.

Publishing Standards: 3D in PDF

In early 2006, Adobe and Right Hemisphere teamed up to respond to the need for a compatible publishing format and ubiquitous viewer capability for 3D information. First, Adobe licensed the Right Hemisphere 3D viewing technology to give Adobe Reader® users the ability to view 3D data within PDF documents. Then Adobe introduced Acrobat 3D, with Right Hemisphere's core 3D authoring application technology. This advancement gives content developers a low-cost solution for importing any type of 3D CAD data into a PDF document. The content can be shared and viewed with the free Adobe Reader software in a variety of render modes.

This broadly available 3D player and full-function document authoring application create a complete desktop 3D technical documentation publishing pipeline for the manufacturing sector and document developers.

Complimenting the desktop applications from Adobe, Right Hemisphere's PGM platform provides an enterprise engine for volume-based automated transformation of CAD data. The creation and support for a central CAD derivative data repository lets enterprises streamline delivery of product graphics for the complete range of next-generation illustrations and animations. Illustrations can be centralized for distribution in print, PDF, and web publishing. Right Hemisphere's PGM platform also supports the unique ability to merge visual and textual engineering and manufacturing data in the same document. Both visual and textual (e.g., bill of materials, part numbers, dimensions) information can be managed in templates that control the linking of the related data and the automatic updates whenever the source files change. The net result is compelling, interactive 3D technical documentation on an enterprise scale, with rich content, and consistently viewable (PDF) by anyone in the world with the free Adobe Reader software.

All registered company names, brand names, product names, logos or trademarks are the property of their respective holders.
Copyright © Right Hemisphere 2006, All Rights Reserved.

The Resulting Evolution of Intelligent Content: Interactive 3D Visuals

Next-generation 3D technical documentation alternatives enhance the effective communication of complex information, differentiate the overall solution in the marketplace, and can introduce new and incremental service revenue streams when delivered as part of documentation, training, part and accessory catalogs or other support solutions.

Improved Accuracy and Consistency

The PGM workflow allows the CAD data to propagate throughout the enterprise, maintaining accuracy, consistency and eliminating errors by avoiding re-entry of product specifications. Change management can be automatically managed by the central server. Software tools also allow textual information such as product dimensions and specifications to be integrated with visual components, extending accuracy to all dimensions and characteristics of the product.

New Levels of Detail

Once the CAD data has been imported and translated into a lightweight file, content developers can generate a variety of views and visual information with a simple mouse click or menu selection. Today's tools provide functions for selecting:

- Viewpoint (rotating)
- Multiple fixed views (visible parts, camera view, rendering mode)
- Detailing (zoom, color, line-art styling, coarse and fine details)
- Transparency of parts (viewing interior parts, flows, or operation)
- Flashing color and other attention-getting warning mechanisms

The Power of Animations

Whereas line art clearly shows how parts fit together, animations clarify how a system of parts works together. Content authoring tools assist in the creation of animations, and allow content developers to combine the best of both 2D line art and 3D animations. A document can include clear illustrations with call outs that allow readers to activate associated animations for enhanced learning.

Interactivity

Hot spots and menu choices can introduce interactivity into technical documentation, providing embedded choices or expanded explanations for selected sections of an illustration. Interactivity also provides a mechanism for introducing multi-lingual text, and streamlining the distribution of translated documents. By including more interactive visuals in a document, the associated text can be significantly reduced. The old adage-a picture is worth a thousand words-should be revised to explain that a picture can avoid translating a thousand words.

"Publishing automation and design reuse promise to alleviate much of the duplicated effort and added time spent in recreating graphics that already exist. As a result, they decrease the cost of developing high-quality documents, allow documentation to be developed earlier in the process, and make maintenance easier by tying downstream documentation to upstream designs."

***Source: Aberdeen Group - The Product Lifecycle Collaboration Benchmark Report, 2006**

All registered company names, brand names, product names, logos or trademarks are the property of their respective holders.
Copyright © Right Hemisphere 2006, All Rights Reserved.

Evolving to Next-Generation Technical Documentation Practices

The benefits of a PGM-centric workflow can be gained as part of a gradual evolution of current technical publication processes and best practices. Examples of gradual steps that can be taken include:

- ***Development of a PGM strategy.*** This can include the identification of the top-priority candidates for benefiting from the new strategy. An organization can affordably introduce a PGM solution and workflow on a pilot project, and gradually adopt next-generation 3D illustrations and PGM concepts in a manner best suited to future projects and organization requirements. Identifying the first and subsequent projects is an important part of the strategic plan.

- ***Develop a project approach.*** Will the PGM solution be deployed with in-house resources, or with help from a partner? An experienced partner can minimize the start-up time, optimize the resulting workflow for the environment, manage each content development project as the PGM process is initiated, and evaluate progress at pre-defined check points.

- ***Implement a pilot project.*** The first effort will allow the documentation team to develop coordination skills, learn to take full advantage of the PGM platform, achieve benefits in the market place, and fund future projects with saved costs compared to traditional workflows. The projects that will benefit the most from the evolution to a PGM process will be graphics-intensive documents.

- ***Expand the PGM platform to other projects and organizations.*** Experience has shown that internal demand rapidly grows once a PGM solution has been adopted in one area of a company. Organization can then streamline the transfer of knowledge from one project team to another by replicating already proven processes from the pilot projects.

With this approach, PGM can interoperate with any existing IT infrastructure, and can be quickly deployed to support multiple business processes. The fast implementation translates to a quick return on investment.

"As companies look to find efficiencies beyond the early stages of the product lifecycle, extract more value, and minimize total lifecycle costs, downstream functions such as manufacturing and service have received more attention. Given today's more complex and dynamic products, it is not surprising that there is room for miscommunication of product design information to these departments. Manufacturing mistakes cost time and money, yet developing detailed instructions for production personnel is costly. The same is true for service."

Source: Aberdeen Group - The Product Lifecycle Collaboration Benchmark Report, 2006

Potential Obstacles and How to Overcome Them

As with any change that impacts multiple teams of users, there will be objections and issues raised during the deployment of a PGM solution. The potential obstacles and associated recommendations are presented here and should be considered during the development of the PGM strategy.

Lack of 3D CAD Models

The advancements in PGM solutions and 3D visualizations are based on derivatives of 3D CAD files. For older products that have no associated CAD files, it may be cost-prohibitive to develop the 3D CAD models required for the PGM approach. However, before ruling out this option, the lifetime support costs must be calculated. For a product that must be supported for several years, the savings associated with switching to a more automated process for content development may justify the higher start-up costs required. If the cost savings do not warrant the development of 3D models, traditional documentation development processes can coexist with a new PGM workflow, and will even introduce benefits when manually generated artwork is centrally managed and shared across multiple organizations.

All registered company names, brand names, product names, logos or trademarks are the property of their respective holders.
Copyright © Right Hemisphere 2006, All Rights Reserved.

Extracting 2D Visuals from 3D Models

When 3D visuals and animations are developed and included in content that can be delivered to computer displays, it may still be necessary to deliver that same content in print. Extracting 2D still visuals from 3D animations do not always produce a result that rivals a manually generated 2D visual. The requirements and restrictions for delivering 3D content must be studied and taken into account before developing content. It may also require a gradual shift to the more advanced forms of 3D content (interactive and animated visuals) to allow time and budgeting for the user bases to be provided with suitable viewing technology.

User Learning Curve and Resistance to Change

The creative process for writers and artists has evolved based on 2D printed documents. With the new opportunities for presenting information more effectively in 3D visualizations, using less associated text, entire new approaches must be taken to plan and develop content. The right PGM consulting partners such as TCS can greatly minimize any pain associated with change, by quickly educating in-house teams on the new tools and the processes. By showing users the many ways that they can more quickly translate their ideas into compelling content, the learning curve can be shortened and users will more enthusiastically adopt the new process.

Environmental Constraints

Where will the content be used? Manufacturing lines, remote service locations, and other environments may have restricted access to computer displays or present obstacles for the operation of portable computers. A PGM strategy must identify the projects that are best suited to electronic delivery options as the optimal candidates for first projects. The strategy must also address how restricted situations will be changed, or how to produce traditional printed versions of content for situations that will not change in the near future.

Video Alternatives

Some content can be delivered using video, but this should not be viewed as an alternative to PGM. Video requires a lengthy and costly development cycle that cannot begin until the product or a working prototype is available. In many cases, PGM offers a more cost-effective alternative by supporting video content as part of a multimedia learning module. The PGM publication alternatives can also accommodate cost-effective video content distribution. Video should never be ruled out-but it should not be considered as a stand-alone next-step for evolving technical publication processes. It is one tool in a broad set of PGM tools that collectively raise technical documentation to the next generation.

Security Concerns

Many engineering organizations have concerns about releasing CAD model files. A PGM workflow can be established without compromising the access to and protection of a company's intellectual property. For example, a PGM CAD derivative repository stores lightweight versions of CAD files. While these can be used for generating illustrations, they cannot be reverse engineered to recreate proprietary design files. In this way, a PGM solution can actually increase protection of a company's most sensitive assets, by minimizing the release of the actual CAD files.

Change Control: Updates to Downstream Collateral

Since a PGM process allows document creation to begin much earlier, it is inevitable that engineering change orders will occur before the product design is stabilized. Throughout the lifecycle, additional change orders will continue to require documentation updates. Without a way to automatically update created illustrations in parallel with engineering change orders, the time savings from the initial content development phase will be greatly diminished. A viable PGM solution must incorporate a method for propagating changes in source files to the documentation that has been created from them.

All registered company names, brand names, product names, logos or trademarks are the property of their respective holders.
Copyright © Right Hemisphere 2006, All Rights Reserved.

Consulting Services

Depending on the in-house resources and the business requirements for technical publications, companies may choose to contract technical assistance for all or part of the tasks surrounding the move to next-generation technical documentation standards and practices. Right Hemisphere has partnered with Tata Consultancy Services (TCS) technical documentation experts to ensure that today's PGM solutions and related industry standards effectively meet the needs of the end users and the consultants that support them.

Companies that choose to compliment their in-house capabilities with consulting expertise to deal with the graphical, interpretive demands of next-generation documentation can rapidly create rich interactive technical documentation solutions. With the partner's team of trained content developers, enterprises and organizations have immediate access to professionals experienced with the tools, technology, best practices, and evolving trends in 3D illustrations.

Conclusions

Service is a strategic component for long-term success in any product development industry. Since any manufacturer's reputation and sales are based on maintaining ongoing relationships and trust with customers, the quality and reliability of service directly impacts the customers' perceptions of the vendor value delivered. Effective and compelling technical documentation allows manufacturers to raise the overall level of their service, and can also enable customer tools for extracting the maximum return on investment from the company's products. Customer expectations for quality documentation and knowledge transfer solutions now include the ability to lower total cost of ownership and shorten the learning curves for the end users and service teams.

By introducing a 3D graphics repository, content developers can cost-effectively introduce rich, compelling illustrations into the complete range of service-related technical documentation and simultaneously leverage content across functional areas. New PGM workflows and solutions yield several benefits for developers of technical documentation:

- ***Effectiveness:*** 3D content introduces the required clarity to effectively communicate complex ideas.
- ***Affordability:*** By leveraging existing CAD data, content developers minimize labor-intensive artwork generation tasks, access a wealth of existing product data, and gain access to a variety of electronic publishing alternatives that reduce costs compared to traditional publishing.
- ***Process efficiencies:*** PGM enables a foundation for a streamlined workflow throughout the enterprise. Existing 3D data and artwork can be securely managed and shared by groups other than the Technical Documentation team, including Marketing, and Purchasing.
- ***Ability to start sooner and finish sooner:*** By leveraging source CAD data, documentation development can begin before the product designs have stabilized. Changes can be automatically propagated to the product artwork, without requiring manual rework.

Right Hemisphere software provides a scalable PGM foundation for managing 3D assets, and positions manufacturers to successfully meet customer expectations for next-generation knowledge transfer solutions. Tata Consultancy Services can shorten the learning curve and help identify the processes in a business that can best benefit from PGM technology and approaches.

TATA CONSULTANCY SERVICES

Tata Consultancy Services Limited (TCS) is the world-leading information technology consulting, services, and business process outsourcing organization that envisioned and pioneered the adoption of the flexible global business practices that today enable companies to operate more efficiently and produce more value. Current strength of EIS is 4200+ consultants and engineers in the Engineering and Industrial Services Group provide a variety of plant and product engineering services in a flexible, global delivery model. TCS leverages Right Hemisphere PGM software in their Technical Publications, Design, and Product Lifecycle Management services lines. Headquartered in India, TCS operates in over 47 countries and 160 offices across the globe.

*To learn more about TCS services, please visit **http://www.tcs.com***

*To learn more about Right Hemisphere's PGM solutions, please visit **http://www.righthemisphere.com***

All registered company names, brand names, product names, logos or trademarks are the property of their respective holders.
Copyright © Right Hemisphere 2006, All Rights Reserved.

Appendix: **Case Study Examples**

Supplier Collaboration: The RFP/RFQ Process

Challenge: A manufacturer of sophisticated immunoassay and chemistry diagnostic instruments for hospitals, labs, and clinics worked with a network of more than 100 suppliers. The purchase of every out-sourced component involved lengthy and iterative FDA-approved RFQ processes.

Opportunity for improvement: The technical documentation in the bid package was inconsistent, fragmented, and required specialized software resulting in miscommunications and delays with suppliers. Proposals included inaccurately specified components, requiring communications and subsequent iterative cycles.

Solution: The instrument company implemented a Right Hemisphere PGM solution, streamlining the supplier collaboration process while adhering to FDA requirements. The new workflow is shorter since suppliers are given access to precise 3D visualizations and Product Manufacturing Information (PMI) that conforms to the ASME Y14.41 standard. The data is made available in standard PDF documents, avoiding the need for special viewing software. Views are enhanced with pan, zoom, rotate, and measure functions, and integrated bills of materials (BOMs), part item callouts, and other PMI-related data.

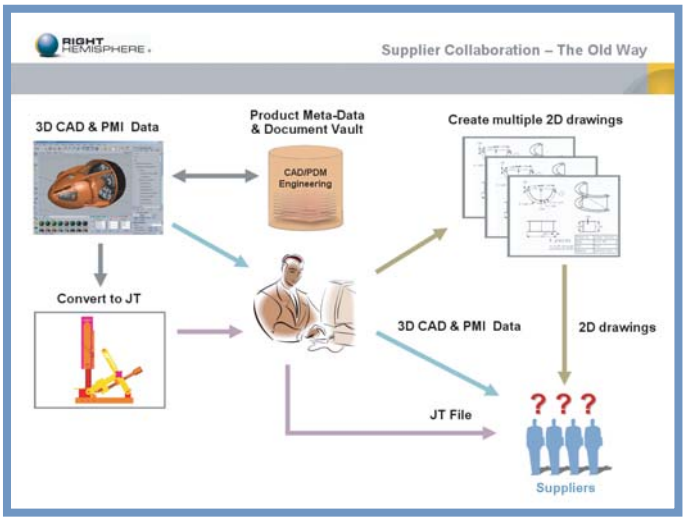

Before: Technical documentation had to be sent to suppliers in multiple formats and was inconsistent, fragmented and required specialized software.

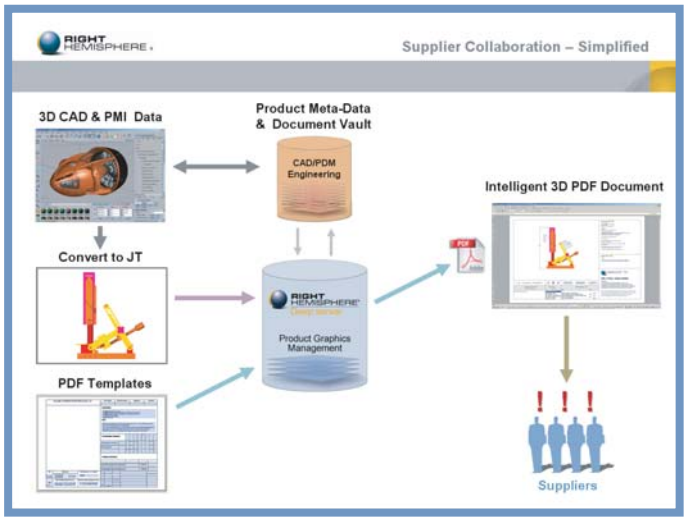

After: Revised supplier collaboration process replaced costly 2D drawings with lightweight 3D product graphics. In addition the associated PMI data is automatically extracted from CAD data and published directly into an interactive PDF.

Benefits: The consistent and more informative RFQ packages result in more accurate proposals and minimized production ramp up for the selected suppliers. Design intent is more quickly conveyed and understood in 3D by the supplier, reducing study time from several days to an afternoon for complex RFQs. Parts are constructed right the first time, improving product quality and shortening release cycles.

All registered company names, brand names, product names, logos or trademarks are the property of their respective holders.
Copyright © Right Hemisphere 2006, All Rights Reserved.

Assembly Instructions and Other Manufacturing Process Documentation

Challenge: The process for creating vector line art for manufacturing process sheets was time consuming and inefficient for a manufacturer of automotive vehicles. A single process could require thousands of illustrations for hundreds of assemblies and parts.

Opportunity for improvement: Each illustration was traditionally manually authored, one at a time, requiring several days of artist time for each drawing. The process also required engineer time to locate and retrieve the source 3D CAD model on a CATIA workstation. If the models were too big to be transferred to the illustrator's workstation, subassemblies would have to be transferred individually and virtually re-assembled by the illustrator in the final drawing.

Solution: The adoption of PGM enables the automated high-volume creation of line art for large-scale 3D models. CAD data is quickly converted into light-weight graphical models with associated metadata. For example, the CAD files for an entire car (approximately 80,000 parts or 35 GBytes of data) can be processed by Right Hemisphere PGM software in less than two hours. Projections can be automatically oriented, and callouts added with simple drag-and-drop operations.

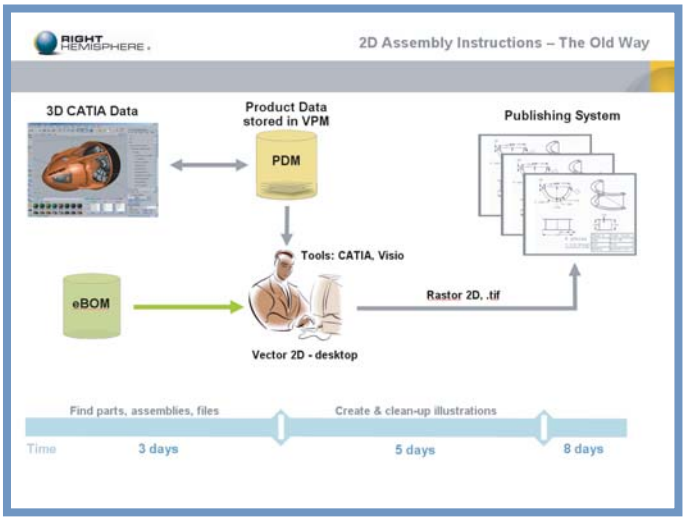

Before: Each illustration was traditionally manually authored, one at a time, requiring several days of artist time for each drawing.

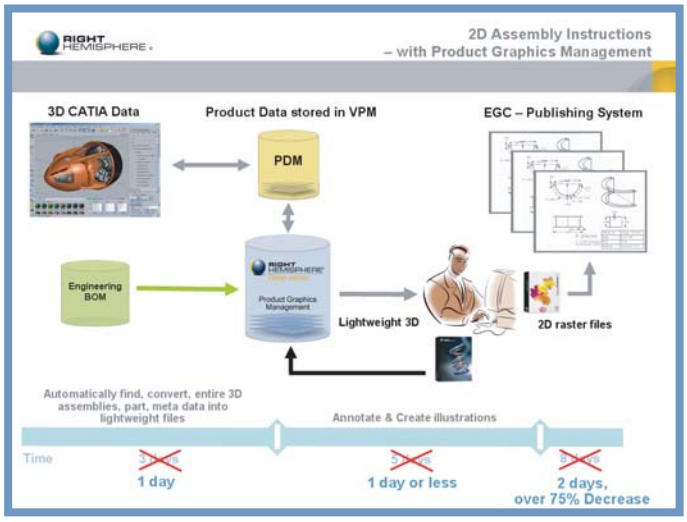

After: The adoption of PGM enabled the automated high-volume creation of line art for large-scale 3D models reducing production by more than 75%.

Benefits: The steps and time for breaking down and re-assembling large models can be totally avoided. Overall drawing creation times are minimized by extracting line art from the CAD models, and art can be re-used efficiently from one drawing to another or one project to another. Organizations can standardize on a set of specific derivative graphics that serve all functional areas.

All registered company names, brand names, product names, logos or trademarks are the property of their respective holders.
Copyright © Right Hemisphere 2006, All Rights Reserved.

Dynamic PDF Parts Catalogs

Challenge: For a manufacturer of mining equipment, product graphics are used throughout several product support offerings such as training materials, part catalogs, technical manuals, and assembly manufacturing process instructions. The cost of developing these product graphics continues to rise.

Opportunity for improvement: Today it can take several weeks to put together a part book for a machine due to several manual steps in the process to create 2D drawings for the related data repository. The manual process involves orienting and saving a model in Pro/ENGINEER as a .dwg file, importing the .dwg file into AutoCAD, stripping out the dimensional data and borders within AutoCAD, converting to a Windows metafile and then putting into the database.

Solution: Right Hemisphere software automatically transforms Pro/ENGINEER CAD data into lightweight 3D models, creating 2D/3D graphics of multiple product views along with exploded assembly parts and callouts, and promoting graphics reuse. The dimensional data and borders are automatically stripped from the model, the model oriented for a 2D drawing (e.g., top, front, iso, section, etc.), callouts added for item balls based on the assembly BOM, and the results saved to a .dwg or Windows metafile for import into Link One.

Benefits: The benefits of the automated PGM process for parts catalogs include costs savings from a shortened development process, and:

- Ubiquitous viewing from any desktop computer with the Adobe Reader.
- Integrated part and assembly information from CAD, PLM, and other enterprise applications in a single, unified, and consistent PDF format.
- Support for interactive 3D with snap-to views and no need to manually produce 2D drawings. Users click a button to snap the 3D model to a top, front, side, isometric, or sectioned view of the assembly or part.
- As changes are approved and implemented, part books in the field can be automatically updated, reducing the cost of maintenance for the parts catalogs.
- Simplification of securely distributing catalogs. PDF documents can be distributed using Adobe's Policy Server.
- Ease of searching for parts and assemblies in PDF. Users can highlight parts and drill down through BOMs to find and view additional part information.
- A solid unified part catalog strategy can be deployed, enabling integration with other enterprise applications such as the part ordering system to improve business process efficiency and lower costs across the company.

All registered company names, brand names, product names, logos or trademarks are the property of their respective holders.
Copyright © Right Hemisphere 2006, All Rights Reserved.